ROSNOL® RF/Microwave Interconnect

Technical Data Sheet

N plug (male) / SMA jack (female)
4-Hole Panel Adapter, DC-11 GHz, VSWR ≤ 1.15

AD-N1A25A-PF / 133-91

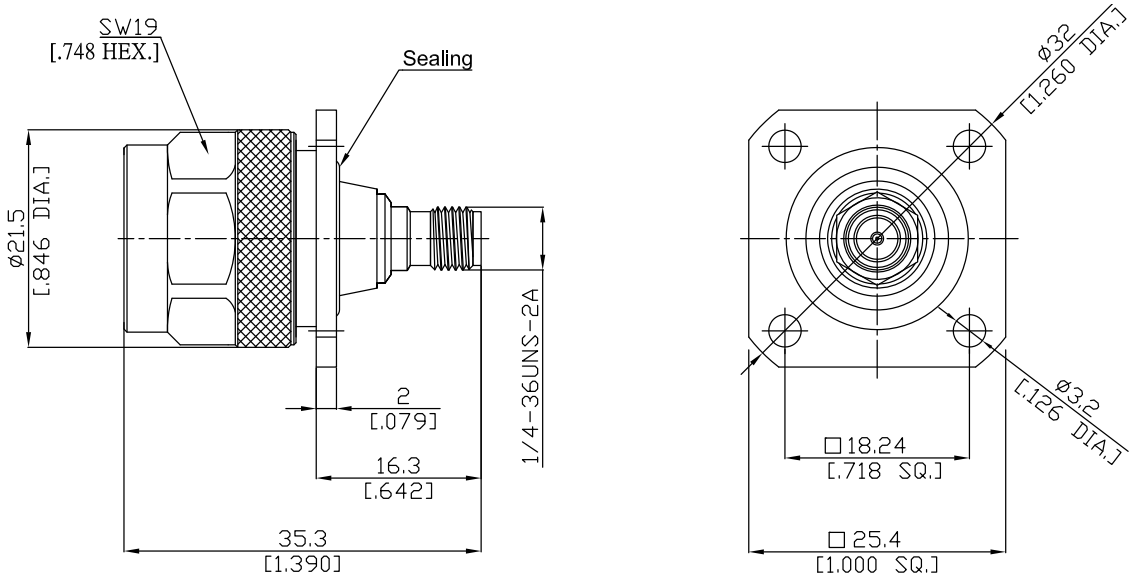

All dimensions are in mm [inch]
Tolerances according to DIN ISO 2768-mH

Interface

N according to	IEC 61169-16; MIL-STD-348B/304
SMA according to	IEC 60169-15; MIL-STD-348B/310

Electrical Data

Impedance	50 Ω	
Frequency	DC to 11 GHz	
VSWR (Return Loss)	≤ 1.15 (≥ 23.1 dB)	
Insertion loss	≤ 0.05 x √F (GHz) dB	
Insulation resistance	≥ 5 GΩ	
Center contact resistance	≤ 1 mΩ, N side	≤ 3 mΩ, SMA side
Outer contact resistance	≤ 0.25 mΩ, N side	≤ 2 mΩ, SMA side
Working voltage	480 V rms	
Power handling (at 20 °C, sea level, VSWR 1.0)	≤ 200 W @ 2 GHz	
RF-leakage	≥ 100 dB up to 1 GHz	

Material And Plating

Piece Parts (N)	Material	Plating
Centre contact	Brass	Gold plating, 3 µinch (Non-magnetic nickel-phosphorus underplating, 80 µinch)
Body	Brass	Nickel
Insulator	PTFE	
Gasket	Silicone Rubber	
Coupling nut	Brass	Nickel
Piece Parts (SMA)	**Material**	**Plating**
Centre contact	Beryllium Copper	Gold plating, 3 µinch (Non-magnetic nickel-phosphorus underplating, 80 µinch)
Body	Brass	Gold plating, 3 µinch (Non-magnetic nickel-phosphorus underplating, 80 µinch)
Insulator	PTFE	
Gasket	Silicone Rubber	

The facts and figures herein are carefully compiled to the best of our knowledge, but they are intended for general informational purposes only. In the effort to improve our products, we reserve the right to make changes judged to be necessary.

Rosnol RF/Microwave Technology Co., Ltd.
www.rosnol.com; info@rosnol.com
Phone: +886-3-463-5095 / Fax: +886-3-463-5952
N-CAGE Code: SFKK0 / ISO9001 Certified

N plug (male) / SMA jack (female)
4-Hole Panel Adapter, DC-11 GHz, VSWR ≤ 1.15

AD-N1A25A-PF / 133-91

Mechanical Data

	N side	SMA side
Coupling mechanisms	Screw-lock	Screw-lock
Mating cycles	min. 500	min. 500
Coupling nut retention	≥ 450 N	N/A
Center contact captivation: axial	≥ 28N	≥ 28N
Coupling test torque	max. 1.7 Nm	max. 1.7 Nm
Recommended torque	0.7 Nm to 1.1 Nm	0.8 Nm to 1.1 Nm

Environmental Data

Temperature Range	-65°C to +165°C
Thermal shock	MIL-STD-202, Meth. 107, Cond. B
Corrosion	MIL-STD-202, Meth. 101, Cond. B
Vibration	MIL-STD-202, Meth. 204, Cond. D
Shock	MIL-STD-202, Meth. 213, Cond. I
Moisture resistance	MIL-STD-202, Meth. 106
RoHS	compliant

Packing

Singleor 100

The facts and figures herein are carefully compiled to the best of our knowledge, but they are intended for general informational purposes only. In the effort to improve our products, we reserve the right to make changes judged to be necessary.

Rosnol RF/Microwave Technology Co., Ltd.
www.rosnol.com; info@rosnol.com
Phone: +886-3-463-5095 / Fax: +886-3-463-5952
N-CAGE Code: SFKK0 / ISO9001 Certified