ROSNOL RF/Microwave Interconnect

Technical Data Sheet

N Plug (Male) Straight Connector, Cable Entry: Crimp, Contact Pin: Plug-in Attachment for LMR-600, RNL-600, DC-6GHz, VSWR1.30

N1C50-EZR600A / 944

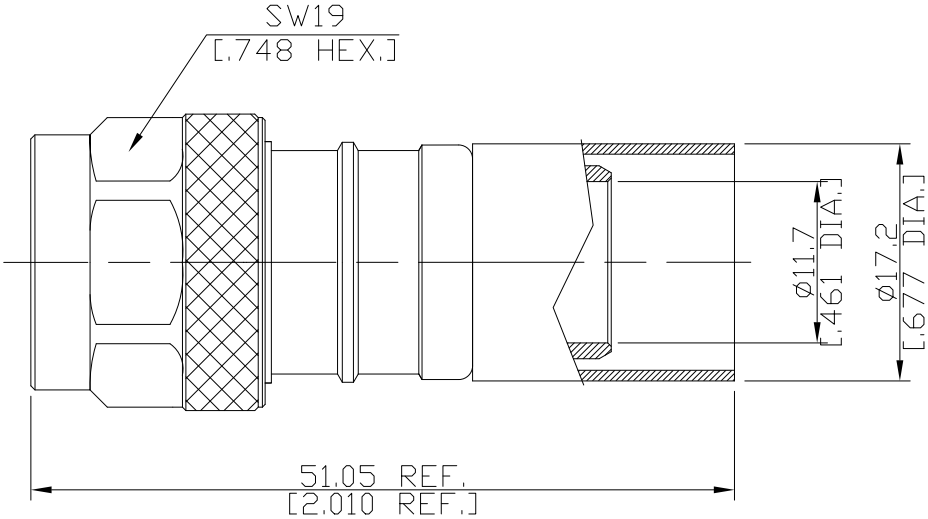

All dimensions are in mm [inch]
Tolerances according to DIN ISO 2768-mH

Interface

According to	IEC 60169-16; MIL-STD-348B/304; CECC 22210; MIL-PRF-39012

Electrical Data

Impedance	50 Ω	
Frequency	DC to 6 GHz	
VSWR (Return Loss)	≤ 1.30 (≥ 17.69 dB)	
Insertion Loss	≤ 0.1x √F (GHz) dB	
Insulation Resistance	≥ 5 GΩ	
Center Contact Resistance	≤ 1 mΩ	
Outer Contact Resistance	≤ 0.25 mΩ	
Working Voltage	500 V rms	
Power handling (at 20 °C, sea level, VSWR 1.0)	≤ 1000 W @ 1 GHz	≤ 700 W @ 2 GHz

-VSWR in application depends decisive on cable assembly process-

Material And Plating

Piece Parts	Material	Plating
Centre contact	Beryllium Copper	Gold plating (Non-magnetic nickel-phosphorus underplating)
Body	Brass	Copper-Tin-Zinc Alloy
Insulator	PTFE	
Gasket	Silicone Rubber	
Coupling nut	Brass	Copper-Tin-Zinc Alloy
Ferrule	Brass	Copper-Tin-Zinc Alloy

The facts and figures herein are carefully compiled to the best of our knowledge, but they are intended for general informational purposes only. In the effort to improve our products, we reserve the right to make changes judged to be necessary.

Rosnol RF/Microwave Technology Co., Ltd.
www.rosnol.com; info@rosnol.com
Phone: +886-3-463-5095 / Fax: +886-3-463-5952
N-CAGE Code: SFKK0 / ISO9001 Certified

N Plug (Male) Straight Connector, Cable Entry: Crimp, Contact Pin: Plug-in Attachment for LMR-600, RNL-600, DC–6GHz, VSWR1.30

N1C50-EZR600A / 944

Mechanical Data

Coupling Mechanisms	Screw-On
Mating Cycles	min. 500
Coupling Nut Retention	≥ 450 N
Center contact captivation: axial	≥ 28 N
Coupling Test Torque	max. 1.7 Nm
Recommended Torque	1.0 Nm
Centre Contact	Plug-in
Cable Entry	Crimped

Environmental Data

Temperature Range	-65°C to +165°C
Thermal Shock	MIL-STD-202, Method 107, Condition B
Corrosion	MIL-STD-202, Method 101, Condition B
Vibration	MIL-STD-202, Method 204, Condition B
Shock	MIL-STD-202, Method 213, Condition I
Moisture Resistance	MIL-STD-202, Method 106
RoHS	compliant

Suitable Cables

LMR-600, Rosnol RNL-600

Packing

Single or 100

The facts and figures herein are carefully compiled to the best of our knowledge, but they are intended for general informational purposes only. In the effort to improve our products, we reserve the right to make changes judged to be necessary.

Rosnol RF/Microwave Technology Co., Ltd.
www.rosnol.com; info@rosnol.com
Phone: +886-3-463-5095 / Fax: +886-3-463-5952
N-CAGE Code: SFKK0 / ISO9001 Certified