ROSNOL	Technical Data Sheet
SMA Straight Panel Receptacle Jack (Flat End)	SMA2GTD50-2000A/91

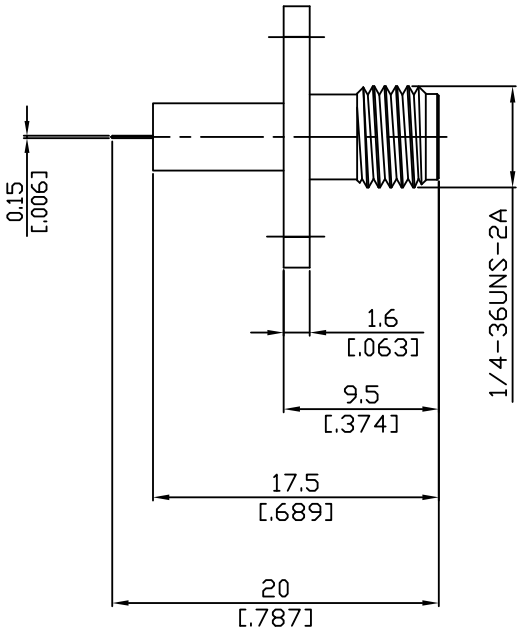

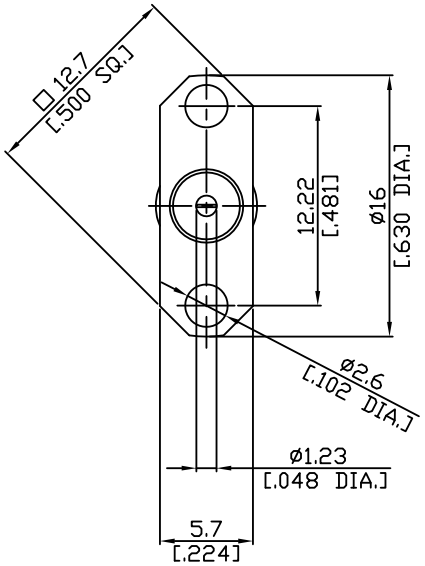

All dimensions are in mm [inch]
Tolerances according to DIN ISO 2768-mH

Interface

According to	MIL-C-39012;MIL-STD-348A/310

Electrical Data

Impedance	50 Ω
Frequency	DC to 18 GHz
VSWR (Return Loss)	≤ 1.25 (≥ 19.08 dB)
Insertion Loss	≤ 0.05 x $\sqrt{F\ (GHz)}$ dB

Mechanical Data

Coupling mechanisms	Screw-lock
Weight	0.0021 kg

Environmental Data

Temperature range	-65°C to +165°C
RoHS	compliant

Material And Plating

Piece Parts	Material	Plating
Centre contact	Beryllium Copper	Gold plating(Nickel underplated)
Body	Brass	Gold plating(Nickel underplated)
Insulator	PTFE	

Packing

Single or 100

Related Document

Mounting Dimension MD75

The facts and figures herein are carefully compiled to the best of our knowledge, but they are intended for general informational purposes only.. In the effort to improve our products, we reserve the right to make changes judged to be necessary.

Rev.:-
Date: 19/11/10

Rosnol RF/Microwave Technology
www.rosnol.com ; info@rosnol.com
Phone:+886-3-463-5095
Fax:+886-3-463-5952