REVISION			
REV.	DESCRIPTION	DATE	APPROVE
–	INITIAL RELEASE	2015/07/16	

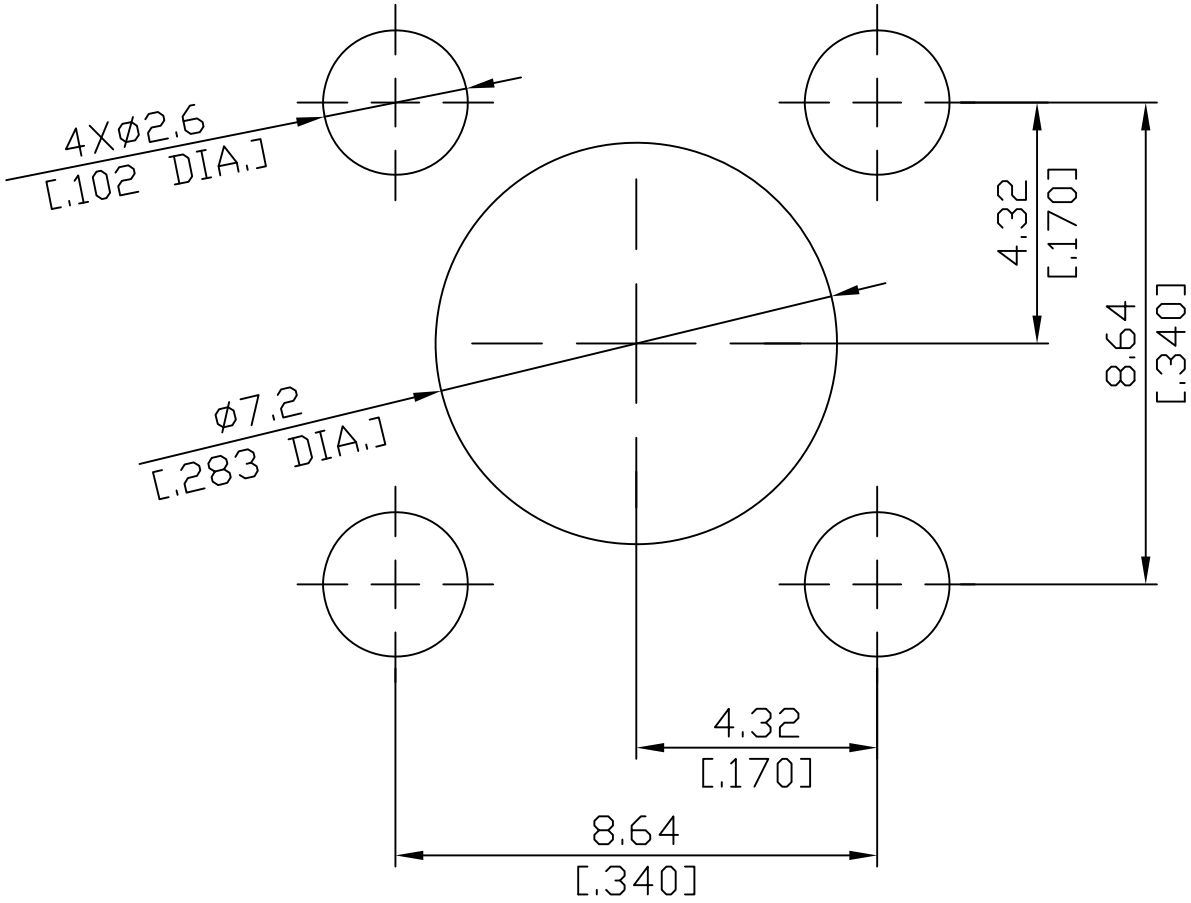

CUSTOMER OUTLINE DRAWING

NOTICE - These drawings, specifications, or other data are, and remain the property of Rosnol corp. must be returned upon request; and are confidential and not to be disclosed to any person other than those to whom they are given by Rosnol Corp. the finishing of these drawings, specifications, or other data by Rosnol Corp., or to any other person to anyone for any purpose is not to be regarded by implication or otherwise in any manner licensing, granting rights to permitting such holder or any other person to manufacture, use or sell any product, process or design, patented or otherwise, that may in any way be related to or disclosed by said drawings, specifications, or other data.

ALL DIMENSIONS ARE IN mm (Inch)

UNLESS OTHERWISE SPECIFIED, DIMENSIONS ARE IN METRIC AND TOLERANCES ARE:

< 0.5mm= ± 0.05mm
0.5 ~ 6mm = ± 0.1mm
6~30mm = ±0.2mm
30~120mm = ± 0.3mm
Angles = ±1°

DRAWN	DATE		
ENGINEER	DATE		
APPROVED	DATE		
SCALE 7 / 1	UNIT mm [inch]	REV -	

Rosnol
RF/Microwave Technology
www.rosnol.com
info@rosnol.com

DES. Mounting Dimension

DRAWING NO. MD 119